ata Karnasch®

BEVELLING CUTTERS AND TOOLS



ACCURATE · EFFICIENT · EFFORTLESS

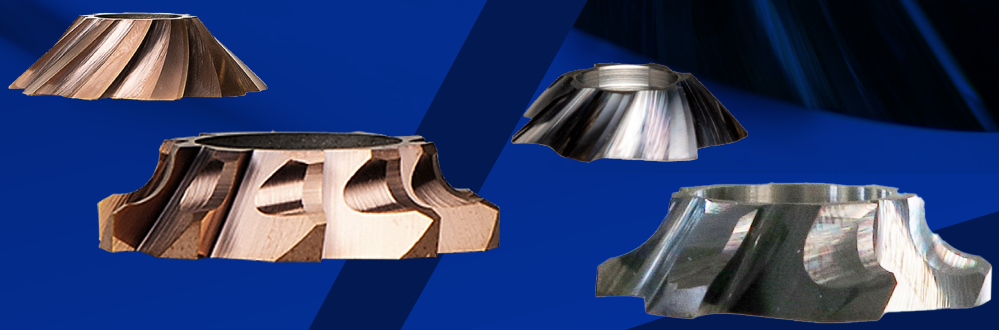

atagroup.com



Ideally suited for welding preparation, chamfering and radii profiling

Welding metal is a skilled, physically demanding and time-consuming job. The quality of the weld preparation is key to ensure a strong weld. Similarly, the rounding of edges on metal has never been so important to ensure compliance with safety regulations.

You can now chamfer and round edges more **accurately** and more **efficiently** with the Karnasch Bevelling Cutters and Tools. Make an **accurate, precise** smooth angle or radius in just one simple **effortless** step.

FEATURES & BENEFITS

- Cutters can be used for bevelling and chamfering edges as well as rounding the edges with a perfect precise radius
- Cutters are available for Steel and Stainless Steel applications
- Consistent results for angle or rounding applications, higher level of workpiece uniformity achievable
- Accurate and effortless process to create welding edges or machined chamfers
- Reduced vibration and noise levels compared to grinding or tools with inserts
- Reduction in air pollution and sparking around the working environment caused by 'fine dust particles'
- Reduced downtime when changing consumables compared to tools with inserts
- Minimal heat transmission into the workpiece
- Prevents discoloration and creates a clean surface that does not require additional treatment



INDUSTRIES

- Welding
- Offshore
- Pipeline
- Shipbuilding
- Marine
- Steel construction
- Bridge building
- Vessel production
- Tank building

APPLICATIONS

BEVELLING



- Weld preparation
- Deburring
- Countersink connections
- Bevel heads are available with angles of 30° | 37.5° | 45°

RADIUS



- Paint / coating adhesion
- Smooth finish
- Cable feed
- Radius cutters are available with a radius (R=mm) of R2, R3, R4, R6, R8 cutters

Angled Cutter Range



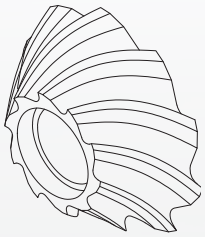

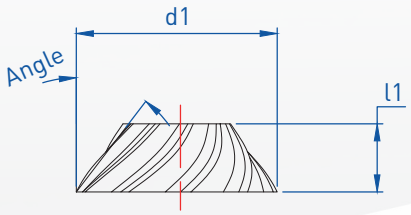

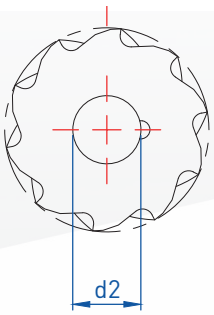

Material Code	Description	Angle	d1 (mm)	l1 (mm)	d2 (mm)
131000-080	30-06	30°	21.5	6.5	9.0
131000-010	30-08	30°	27.1	8.0	12.0
131000-020	30-12	30°	31.1	12.0	12.0
131000-030	37-08	37.5°	29.1	8.0	12.0
131000-040	37-12	37.5°	35.9	12.0	12.0
131000-050	45-06	45°	22.0	6.5	9.0
131000-060	45-08	45°	33.0	8.0	12.0
131000-070	45-12	45°	41.0	12.0	12.0

Radius Cutter Range



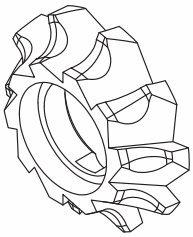

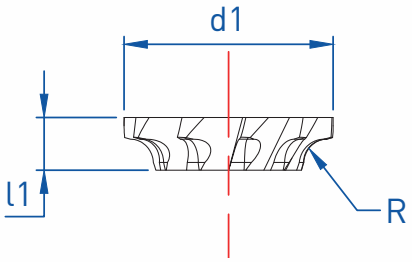

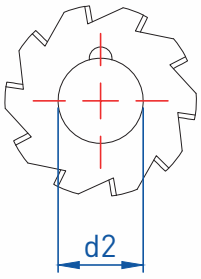

Material Code	Description	Radius (R)	d1 (mm)	l1 (mm)	d2 (mm)
131010-010	R2-06	R2	22.0	6.5	9.0
131010-020	R2-08	R2	27.0	7.0	12.0
131010-030	R3-06	R3	22.0	6.5	9.0
131010-040	R3-08	R3	27.0	7.0	12.0
131010-050	R4-06	R4	23.0	6.5	9.0
131010-060	R4-08	R4	28.0	7.0	12.0
131010-070	R6-10	R6	33.0	10.0	12.0
131010-080	R8-12	R8	39.0	12.0	12.0

BENEFITS

- Solid carbide bevel heads for a long service life
- Concentricity improves lifetime of cutters
- Higher level of uniformity and fitting
- New: Tisinos® coating results in an increased cutter life and improved surface finish

APPLICATION MATERIALS

Steel			Non-Ferrous
S235	>S355	Plasma / Laser Cut	
Excellent			Not advisable

Bevelling Air Tools

Bevel faster with the range of Karnasch bevelling air tools. The tools have an excellent power to weight ratio, offering consistently high quality cutting with minimal physical effort.

The bevel can be adjusted to various depths easily and can be replaced very quickly.

For lighter bevelling and radius work, up to a depth of 6mm, Karnasch offers the 130100 and 130110. Specially designed for quick rounding of small sheets, pipes and holes, with depth adjustments of 0.125mm increments, the tools are precise and easy to use.

Designed for heavy-duty bevelling up to a depth of 12mm or radius work up to 8mm, with depth adjustments of 0.25mm increments, the 130120 offers a powerful 1.5HP motor ensuring that even the most physically demanding and time-consuming work is completed more efficiently.



Flange Head

Adjustable flange can cater for various cut depths



130120



130110

Bevelling Tool Specifications

Product Code	130100	130110	130120
Motor	Pneumatic	Pneumatic	Pneumatic
Max. Depth (mm)	±3mm at 45°	6	12
Air Pressure (bar)	6.3	6.3	6.3
Air Consumption (m³/min)	0.63	0.62	1.13
Power (W)	375	820	1100
Max Speed (rpm)	25000	16000	9000
Weight (kg)	1.07	1.33	4.40
For Radius (mm)	R2 | R3 | R4	R2 | R3 | R4	R2 | R3 | R4 | R6 | R8
For Bevels	30° | 45°	30° | 45°	30° | 37.5° | 45°
Min Opening for Bevelling (mm)	22	22	41
Min Opening for Rounding (mm)	16	16	22



Spindle Lock Button

Allowing for a quicker cutter change

Flange Plate

Nitride hardened, scratch resistant flanges for improved sliding capability



130100

BENEFITS

- Concentricity for a smoother cut increasing the lifetime of the cutter
- Reduced vibration results in improved operator comfort
- Spindle lock button allows for quick and easy cutter replacement
- Nitride hardened (QPQ), scratch-resistant flanges for improved sliding capability

Bevelling Electric Tools

Designed for heavy-duty bevelling up to a depth of 12mm and radius work up to 8mm, the Karnasch electric machines are versatile, compact and powerful, offering consistently high quality cutting with minimal physical effort.

Available in 120 volt the 130200 is fitted with a UK 3-Pin Industrial Plug, and the 230 volt 130210 is fitted with a 2-Pin EU Plug, both delivering an impressive 1.53kW of power.

When coupled with the unique design of the Karnasch bevel heads you can chamfer and round more quickly compared to other conventional methods. The bevel head can be easily adjusted to various depths by adjusting the flange head height in increments of 0.25mm and can also be replaced very quickly. The flange head design includes a nitride hardened flange plate for improved sliding capability.

Variable Speed



Flange Plate

Nitride hardened, scratch resistant flanges for improved sliding capability



130200

120V UK 3-Pin Industrial Plug



130210

230V 2-Pin EU Plug

Bevelling Tool Specifications

Product Code	130200	130210
Motor	Electric	Electric
Max Bevel Depth (mm)	12	12
Power (kW)	1.53	1.53
Voltage (V)	120	230
Plug Type	UK 3-Pin Industrial	EU 2-Pin
Speed (rpm)	5000 - 10000	5000 - 10000
Weight (kg)	4.5	4.5
For Radius	R2 | R3 | R4 | R6 | R8	R2 | R3 | R4 | R6 | R8
For Bevels	30° | 37.5° | 45°	30° | 37.5° | 45°
Min. opening diameter for bevelling (mm)	41	41
Min. opening diameter for rounding (mm)	22	22



Spindle Lock Button

Allowing for a quicker cutter change

Flange Head

Adjustable flange can cater for various cut depths

BENEFITS

- Powerful 1.53kW motor with variable speed
- Concentricity for a smoother cut increasing the lifetime of the cutter
- Reduced vibration results in improved operator comfort
- Spindle lock button allows for quick and easy cutter replacement
- Nitride hardened (QPQ), scratch-resistant flanges for improved sliding capability



Redefining Precision: The ATA Karnasch INOX Solution

Stainless steel is known for its strength — but that same toughness makes it notoriously difficult to rework with traditional hand tools. Bevelling and rounding stainless steel edges by hand has long been a demanding task—challenging precision, demanding on tools, and accelerating wear on inserts or grinding consumables.

That's why ATA Karnasch have developed our specialised INOX cutters, engineered specifically for stainless steel applications. Each cutter features an optimised geometry, and a high-performance coating designed to dramatically reduce friction between the tool and the material, resulting in a **smoother**, **faster**, and more **efficient** cutting.

FEATURES & BENEFITS

- ✓ Cutters can be used for bevelling and chamfering edges as well as rounding the edges with a perfect precise radius
- ✓ Designed for use on stainless steel applications
- ✓ Consistent results for angle or rounding applications, higher level of workpiece uniformity achievable
- ✓ Accurate and effortless process to create welding edges or machined chamfers
- ✓ Reduced vibration and noise levels compared to grinding or tools with inserts
- ✓ Reduction in air pollution and sparking around the working environment caused by 'fine dust particles'
- ✓ Reduced downtime when changing consumables compared to tools with inserts
- ✓ Minimal heat transmission into the workpiece
- ✓ Prevents discoloration and creates a clean surface that does not require additional treatment



INDUSTRIES

- Welding
- Offshore
- Pipeline
- Shipbuilding
- Marine
- Steel construction
- Bridge building
- Vessel production
- Tank building

APPLICATIONS



- Weld preparation
- Deburring
- Countersink connections
- Bevel heads are available with angles of 30° | 45°



- Paint / coating adhesion
- Smooth finish
- Cable feed
- Radius cutters are available with a radius (R=mm) of R2, R3, R4 cutters

INOX Angled Cutter Range

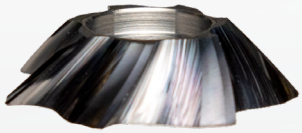

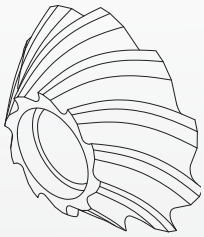

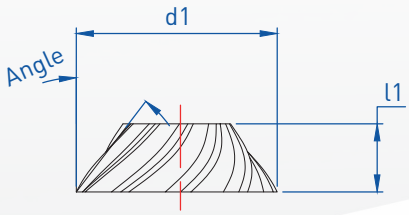

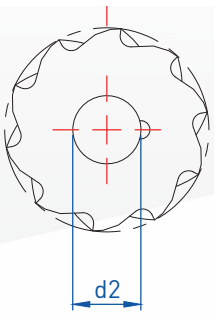

INOX Material Code	Description	Angle	d1 (mm)	l1 (mm)	d2 (mm)
132000-080	30-06	30°	21.5	6.5	9.0
132000-010	30-08	30°	27.1	8.0	12.0
132000-050	45-06	45°	22.0	6.5	9.0
132000-060	45-08	45°	33.0	8.0	12.0

INOX Radius Cutter Range

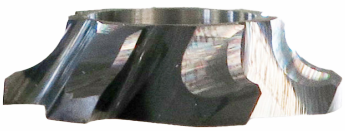

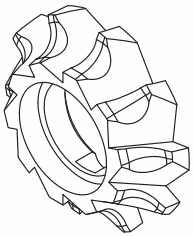

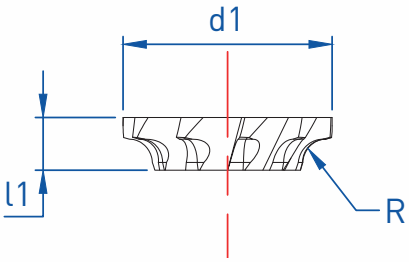

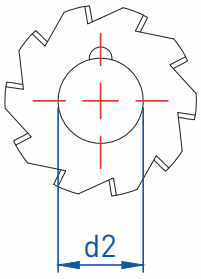

Material Code	Description	Radius (R)	d1 (mm)	l1 (mm)	d2 (mm)
132010-010	R2-06	R2	22.0	6.5	9.0
132010-020	R2-08	R2	27.0	7.0	12.0
132010-030	R3-06	R3	22.0	6.5	9.0
132010-040	R3-08	R3	27.0	7.0	12.0
132010-060	R4-08	R4	28.0	7.0	12.0

BENEFITS

- Designed for use on stainless steel
- Solid carbide bevel heads for a long service life
- Concentricity improves lifetime of cutters
- Higher level of uniformity and fitting
- New: Altinos® coating results in an increased cutter life and improved surface finish

APPLICATION MATERIALS

Stainless Steel	
S304	S316
Excellent	

INOX Bevelling Air Tool

The INOX series features a selection of specialised tools—each engineered for precision bevelling and rounding of stainless steel edges.

While each tool is designed with unique specifications to meet varying operational needs, the intuitive control system offers seamless usability across the range.

For radius and bevelling work, up to a 6mm depth, Karnasch offers the 130290.



Flange Head

Adjustable flange can cater for various cut depths

Bevelling Tool Specifications

Product Code	130290
Motor	Pneumatic
Max. Bevel Depth (mm)	6
Power (W)	820
Voltage (V)	n/a
Plug Type	n/a
Speed (rpm)	5000
Weight (kg)	1.5
For Radius (mm)	R2 | R3
For Bevels	30° | 45°
Min Opening Ø for Bevelling (mm)	22
Min Opening Ø for Rounding (mm)	16



Flange Plate

Nitride hardened, scratch resistant flanges for improved sliding capability

Spindle Lock Button

Allowing for a quicker cutter change

BENEFITS

- Low speed, high torque air motor
- Concentricity for a smoother cut increasing the lifetime of the cutter
- Reduced vibration results in improved operator comfort
- Spindle lock button allows for quick and easy cutter replacement
- Nitride hardened (QPQ), scratch-resistant flanges for improved sliding capability

INOX Bevelling Electric Tools

Designed with performance in mind, the electric INOX tools operate at a reduced rotational speed (RPM) and is also supported by a more powerful motor, creating a perfect balance between control and strength, which results in a highly effective, reliable solution that delivers flawless chamfering and edge rounding with unmatched consistency and efficiency.

For radius and bevelling up to a depth of 6mm, Karnasch offers a straight electric tool. The120V 130270 is fitted with a UK 3-Pin Industrial Plug, and the 240V 130280 is fitted with a 2-Pin EU Plug, both delivering 600W power.

For radius and bevelling depths of 8mm, Karnasch offers a right-angled electric tool. The120V 130240 is fitted with a UK 3-Pin Industrial Plug, and the 240V 130250 is fitted with a 2-Pin EU Plug, both delivering 1200W power.



Spindle Lock Button

Allowing for a quicker cutter change

Variable Speed

Flange Head

Adjustable flange can cater for various cut depths

Flange Plate

Nitride hardened, scratch resistant flanges for improved sliding capability

Bevelling Tool Specifications

Product Code	130240	130250	130270	130280
Motor	Electric	Electric	Electric	Electric
Max. Bevel Depth (mm)	8	8	6	6
Power (W)	1200	1200	600	600
Voltage (V)	120	230	120	230
Plug Type	UK 3-Pin Industrial	EU 2-Pin	UK 3-Pin Industrial	EU 2-Pin
Speed (rpm)	1100 - 3600	1100 - 3600	2700 - 6000	2700 - 6000
Weight (kg)	5.65	5.65	2.46	2.46
For Radius (mm)	R2 | R3 | R4	R2 | R3 | R4	R2 | R3	R2 | R3
For Bevels	30° | 45°	30° | 45°	30° | 45°	30° | 45°
Min Opening Ø for Bevelling (mm)	41	41	22	22
Min Opening Ø for Rounding (mm)	22	22	16	16



BENEFITS

- Low speed, high power electric motor
- Powerful high torque motor with variable speed
- Concentricity for a smoother cut increasing the lifetime of the cutter
- Reduced vibration results in improved operator comfort
- Spindle lock button allows for quick and easy cutter replacement
- Nitride hardened (QPQ), scratch-resistant flanges for improved sliding capability

How-to Guide - Air Tool

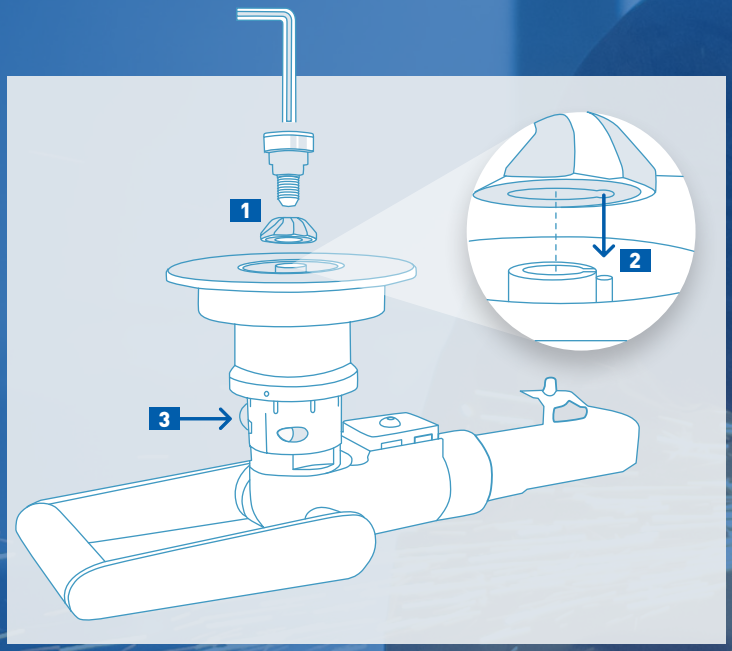

1 Place bevel cutter onto the adaptor

2 The pin on the adaptor should align with the pinhole on the cutter

3 Lock the spindle using the lock button

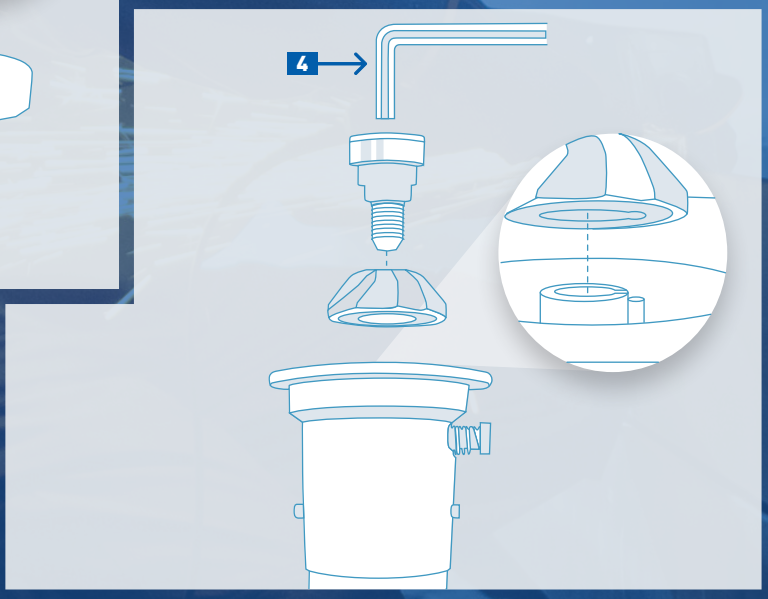

4 Tighten the guide bearing using the hex key provided

5 Complete a free run test of the tool

6 When changing to a new cutter always ensure you use a new bearing (supplied)

Right Angled Tools

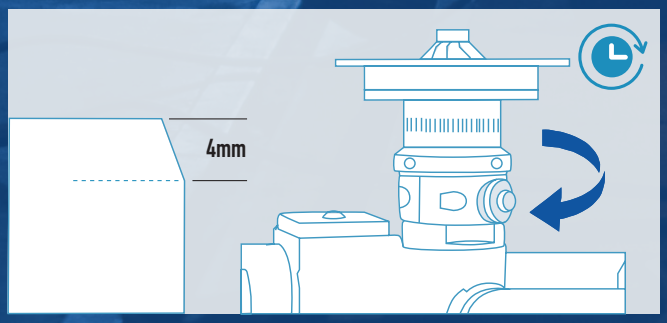

→ 1 click is equal to 0.25mm

→ Therefore, 1mm adjustment requires 4 clicks

→ Maximum single pass cut of up to 4mm

Straight Tools

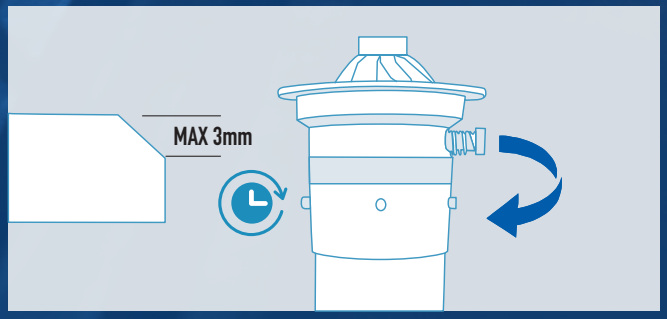

→ 1 click is equal to 0.125mm

→ Therefore, 1mm adjustment requires 8 clicks

→ Maximum single pass cut of up to 3mm

How-to Guide - Electric Tool

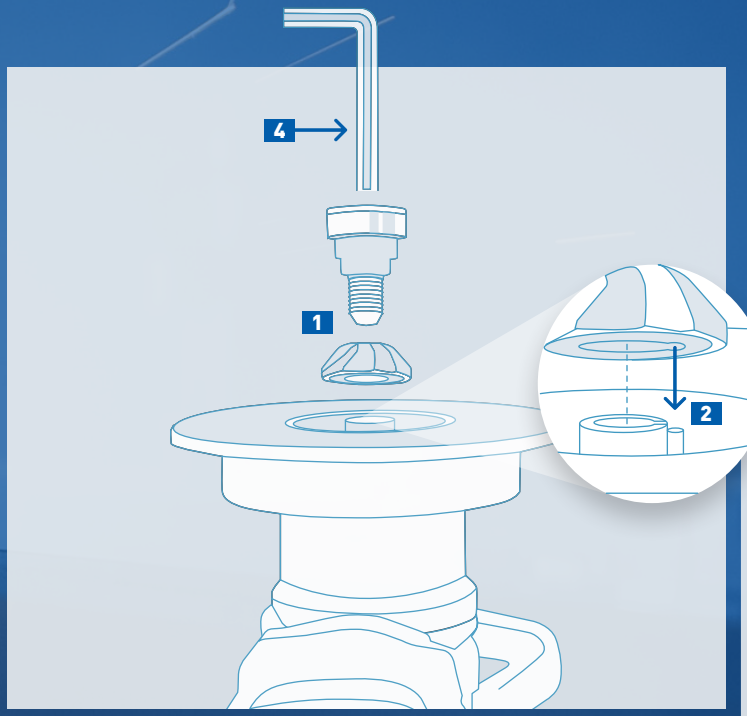

1. Place bevel cutter onto the adaptor
2. The pin on the adaptor should align with the pinhole on the cutter
3. Lock the spindle using the lock button

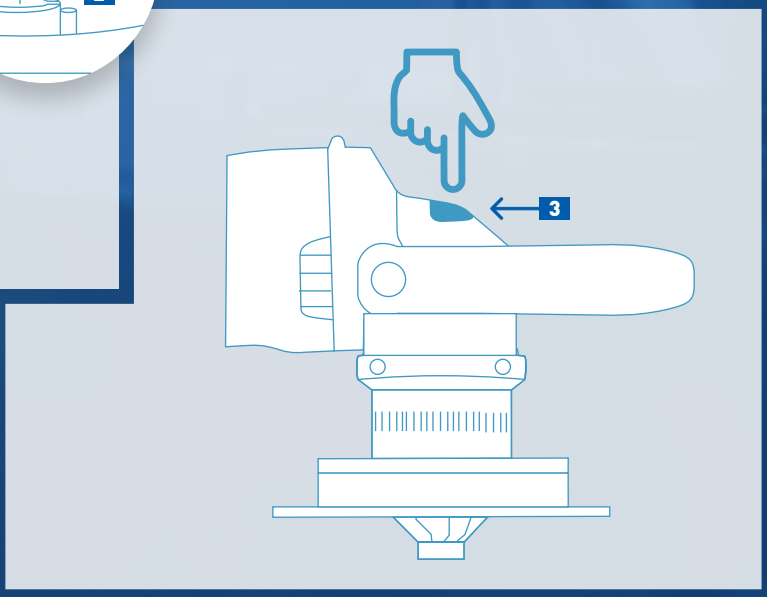

4. Tighten the guide bearing using the hex key provided
5. Complete a free run test of the tool
6. When changing to a new cutter always ensure you use a new bearing (supplied)

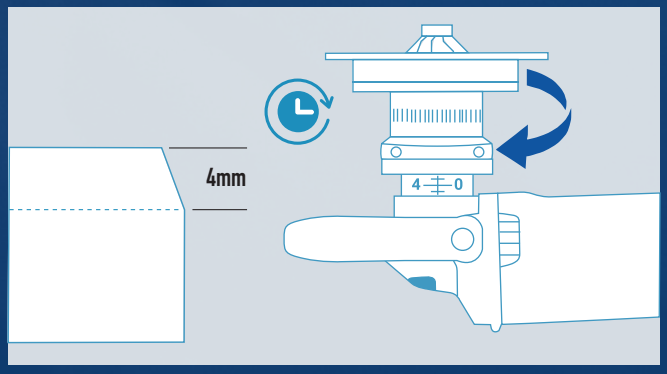

→ 1 click is equal to 0.25mm

→ Therefore, 1mm adjustment requires 4 clicks

→ Maximum single pass cut of up to 4mm

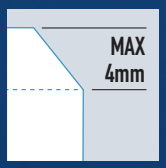

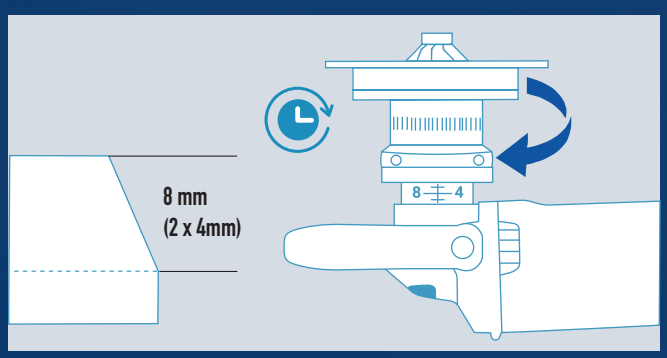

→ When bevelling, approach the workpiece at a 45° angle.

→ Ensure that the flange head is flat on the workpiece.

→ Do not use excessive force.

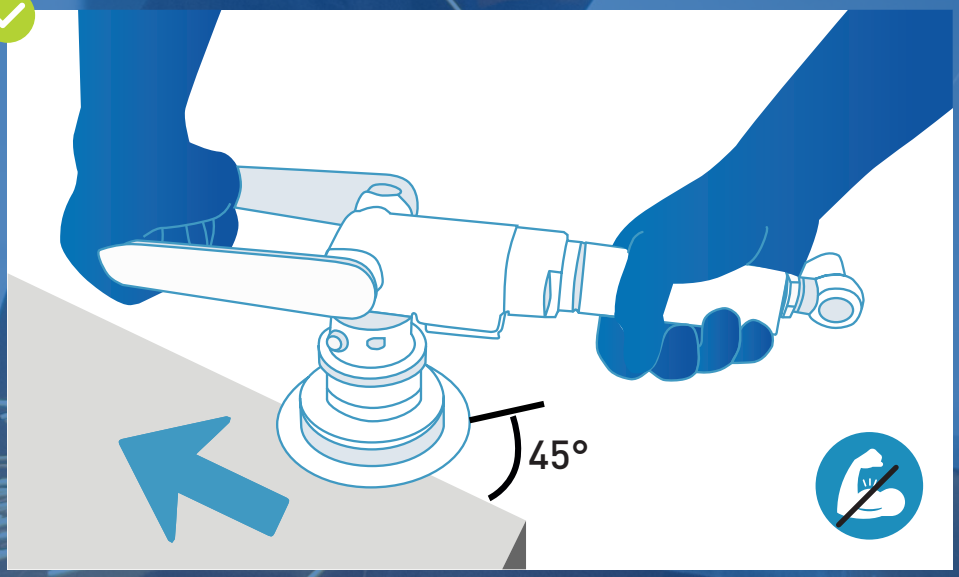

→ To ensure a precise, uniform and consistent cut, the flange head must be flat on the workpiece.

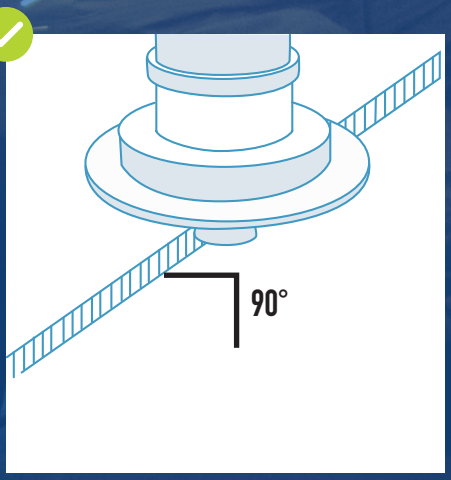

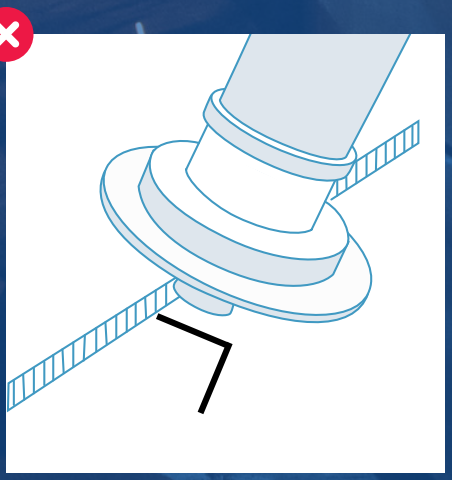

→ For internal grinding use the tool in a clockwise motion.

→ For external grinding use the tool in an anti-clockwise motion.

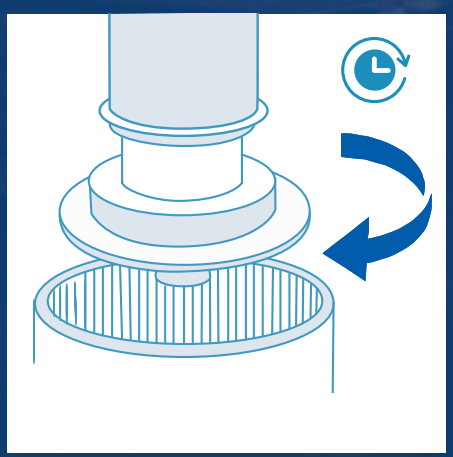

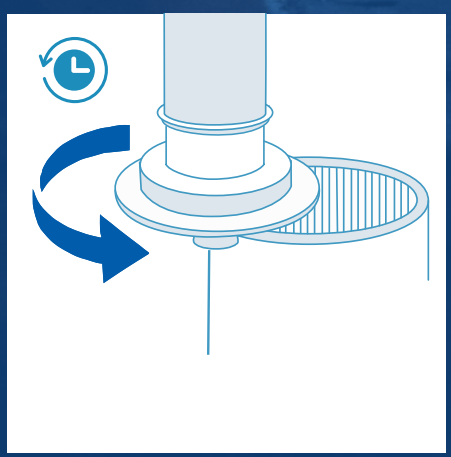

Cutter and Tool Matrix

Bevel Head Description	Bevel Head Part Number	For Radius	For Chamfer	Bevel Tool Part Number	Replacement Guide Bearing Code
Karnasch Bevel Head 30-06	131000-080		30°	130100 | 130110	801-057-00
Karnasch Bevel Head 30-08	131000-010		30°	130120 | 130200 | 130210	801-058-00
Karnasch Bevel Head 30-12	131000-020		30°	130120 | 130200 | 130210	801-060-00
Karnasch Bevel Head 37-08	131000-030		37.5°	130120 | 130200 | 130210	801-058-00
Karnasch Bevel Head 37-12	131000-040		37.5°	130120 | 130200 | 130210	801-060-00
Karnasch Bevel Head 45-06	131000-050		45°	130100 | 130110	801-057-00
Karnasch Bevel Head 45-08	131000-060		45°	130120 | 130200 | 130210	801-058-00
Karnasch Bevel Head 45-12	131000-070		45°	130120 | 130200 | 130210	801-060-00
Karnasch Bevel Head R2-06	131010-010	R2		130100 | 130110	801-057-00
Karnasch Bevel Head R2-08	131010-020	R2		130120 | 130200 | 130210	801-059-00
Karnasch Bevel Head R3-06	131010-030	R3		130100 | 130110	801-057-00
Karnasch Bevel Head R3-08	131010-040	R3		130120 | 130200 | 130210	801-059-00
Karnasch Bevel Head R4-06	131010-050	R4		130100 | 130110	801-057-00
Karnasch Bevel Head R4-08	131010-060	R4		130120 | 130200 | 130210	801-059-00
Karnasch Bevel Head R6-10	131010-070	R6		130120 | 130200 | 130210	801-061-00
Karnasch Bevel Head R8-12	131010-080	R8		130120 | 130200 | 130210	801-061-00



130100



130110



130120



130200 | 130210

INOX Cutter and Tool Matrix

Bevel Head Description	Bevel Head Part Number	For Radius	For Chamfer	Bevel Tool Part Number	Replacement Guide Bearing Code
Karnasch INOX Bevel Head 30-06	132000-080		30°	130270 | 130280 | 130290	801-057-00
Karnasch INOX Bevel Head 30-08	132000-010		30°	130240 | 130250	801-058-00
Karnasch INOX Bevel Head 45-06	132000-050		45°	130270 | 130280 | 130290	801-057-00
Karnasch INOX Bevel Head 45-08	132000-060		45°	130240 | 130250	801-058-00
Karnasch INOX Bevel Head R2-06	132010-010	R2		130270 | 130280 | 130290	801-057-00
Karnasch INOX Bevel Head R2-08	132010-020	R2		130240 | 130250	801-059-00
Karnasch INOX Bevel Head R3-06	132010-030	R3		130270 | 130280 | 130290	801-057-00
Karnasch INOX Bevel Head R3-08	132010-040	R3		130240 | 130250	801-059-00
Karnasch INOX Bevel Head R4-08	132010-060	R4		130240 | 130250	801-059-00



130240 | 130250



130270 | 130280



130290

ata Karnasch®

INTERNATIONAL OFFICES
ATA Tools Ltd., IDA Business & Technology Park,
Killygarry, Cavan, Co. Cavan, H12 DK46, Ireland
T: +353 (0) 49 432 6178
F: +353 (0) 49 432 6298
E: ie.sales@atagroup.com

UK OFFICES
ATA Garryson Ltd., Spring Road, Ibstock,
Leicestershire, LE67 6LR, UK
T: +44 (0) 1530 261 145
F: +44 (0) 1530 262 801
E: uk.orders@atagroup.com



atagroup.com